VENTS MAO1 Series

Axial window fans
for exhaust ventilation
with the capacity up to 345 m³/h

VENTS MAO2 Series

Axial window fans
for exhaust ventilation
with the capacity up to 232 m³/h

Application

- Continuous or periodic exhaust ventilation of bathroom, showers, kitchens and other utility spaces.
- For mounting in windows.

Design

- Modern design and aesthetic look.
- The casing and the impeller are made of high-quality durable ABS plastic, UV resistant.
- The intellectual impeller design makes the fan efficiency high and the service life long.
- The fan and motor are specially designed for silent operation.
- Fan is equipped with a thermal actuator that provides smooth opening and shutting of automatic louver shutters for air back flow preventing.
- MAO2 Series fans are equipped with an external hood.
- Protection rating IP24.

Motor

- Reliable and low-watt electric motor.
- Designed for continuous operation and requires no maintenance.
- Equipped with overheating protection.

Modifications and Options

MAO1 L / MAO2 L – the motor is equipped with ball bearings for long service life (appr. 40 thousand hours) and fan mounting at any angle. The bearings are maintenance-free and contain enough grease for the entire operating period.

MAO1 turbo / MAO2 turbo – high-powered motor.

MAO1 12 / MAO2 12 – modification with low-voltage motor. 12 V AC power supply.

MAO1 T / MAO2 T – equipped with a regulated timer with the operating time from 2 to 30 minutes.

MAO1 V / MAO2 V – equipped with a pull cord switch.

MAO1 VT / MAO2 VT – equipped with a pull cord switch and a regulated timer with the operating time adjustable from 2 to 30 minutes.

Control

Manual:

- The fan is controlled by a room light switch. It is not included in the delivery package.
- The fan is controlled by the built-in pull cord switch **V**.

Automatic:

- By the electronic control unit **BU–1–60** (see Electrical Accessories). The control unit is supplied separately.
- By the timer T (the built-in turn-off delay timer enables the fan operation within 2 to 30 minutes after the fan switching off).

Mounting features

- The fan is mounted directly into the window opening.
- For 12 V low-voltage motor fan connection to 220 V/50 Hz power mains use the step-down transformer TRF 220/12-25 that is available upon separate order.

Back side of MAO2 fan

Fan OFF – louver shutters CLOSED

Fan ON – louver shutters OPEN

Accessories

Speed controllers

Aerodynamic characteristics

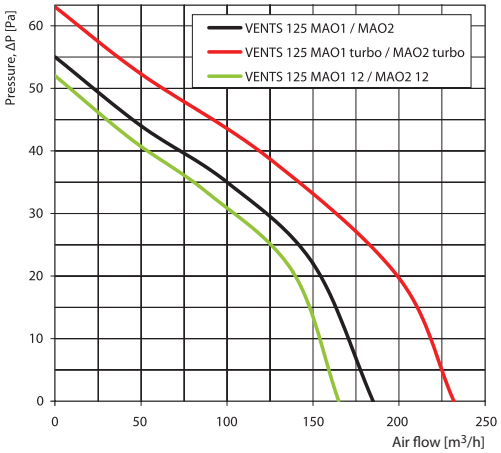

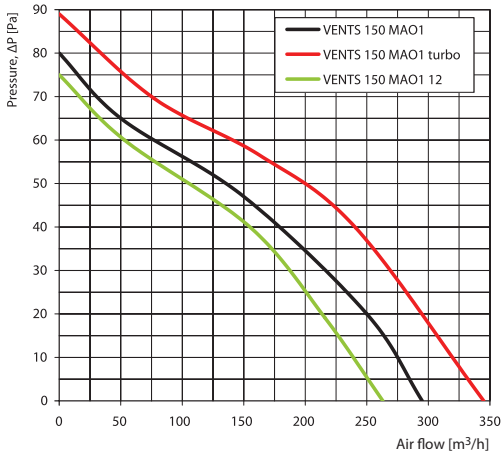

Technical data

Model	Frequency [Hz]	Voltage [V]	Power Consumption [W]	Current [A]	R.p.m.	Maximum air flow [m³/h]	Sound Pressure Level at 3 m [dBA]	SEC class	Weight [kg]
VENTS 125 MAO1	50/60	220-240	22	0.1	2400	185	35	E	1.15
VENTS 125 MAO1 turbo	50/60	220-240	24	0.105	2400	232	37	E	1.31
VENTS 125 MAO1 12	50/60	12	16	1.7	2300	165	34	E	1.13
VENTS 125 MAO2	50/60	220-240	22	0.1	2400	185	35	E	1.14
VENTS 125 MAO2 turbo	50/60	220-240	24	0.105	2400	232	37	E	1.24
VENTS 125 MAO2 12	50/60	12	16	1.7	2300	165	34	E	1.12
VENTS 150 MAO1	50	220-240	26	0.13	2400	295	41	E	1.53
VENTS 150 MAO1 (220 V/60 Hz)	60	220							
VENTS 150 MAO1 turbo	50	220-240	29	0.13	2400	345	43	E	1.67
VENTS 150 MAO1 turbo (220 V/60 Hz)	60	220							
VENTS 150 MAO1 12	50	12	29	2	2300	263	40	E	1.49

Overall dimensions

Model	Dimensions [mm]					
	Ø D	B	H	H1	L1	L2
VENTS 125 MAO1	125	190	173	–	58	53
VENTS 150 MAO1	150	212	195	–	66	60
VENTS 125 MAO2	–	190	173	160	58	123

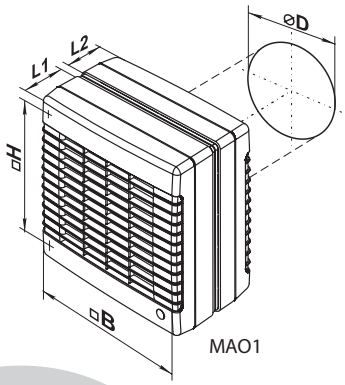

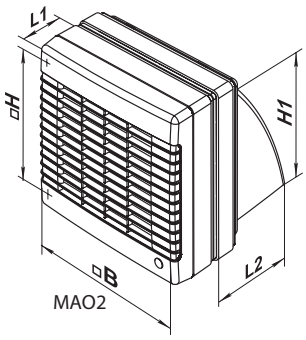

Mounting examples

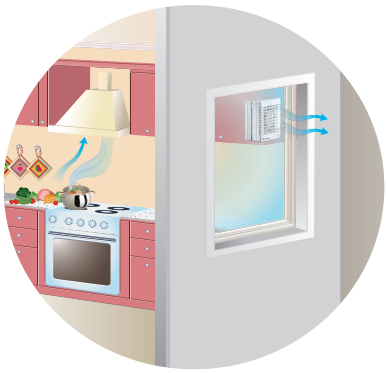

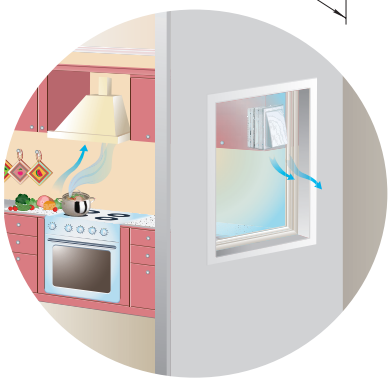

Certificates

IP24 The fans meet the applicable safety and electromagnetic compatibility standards.